LST200 Series Mechanical
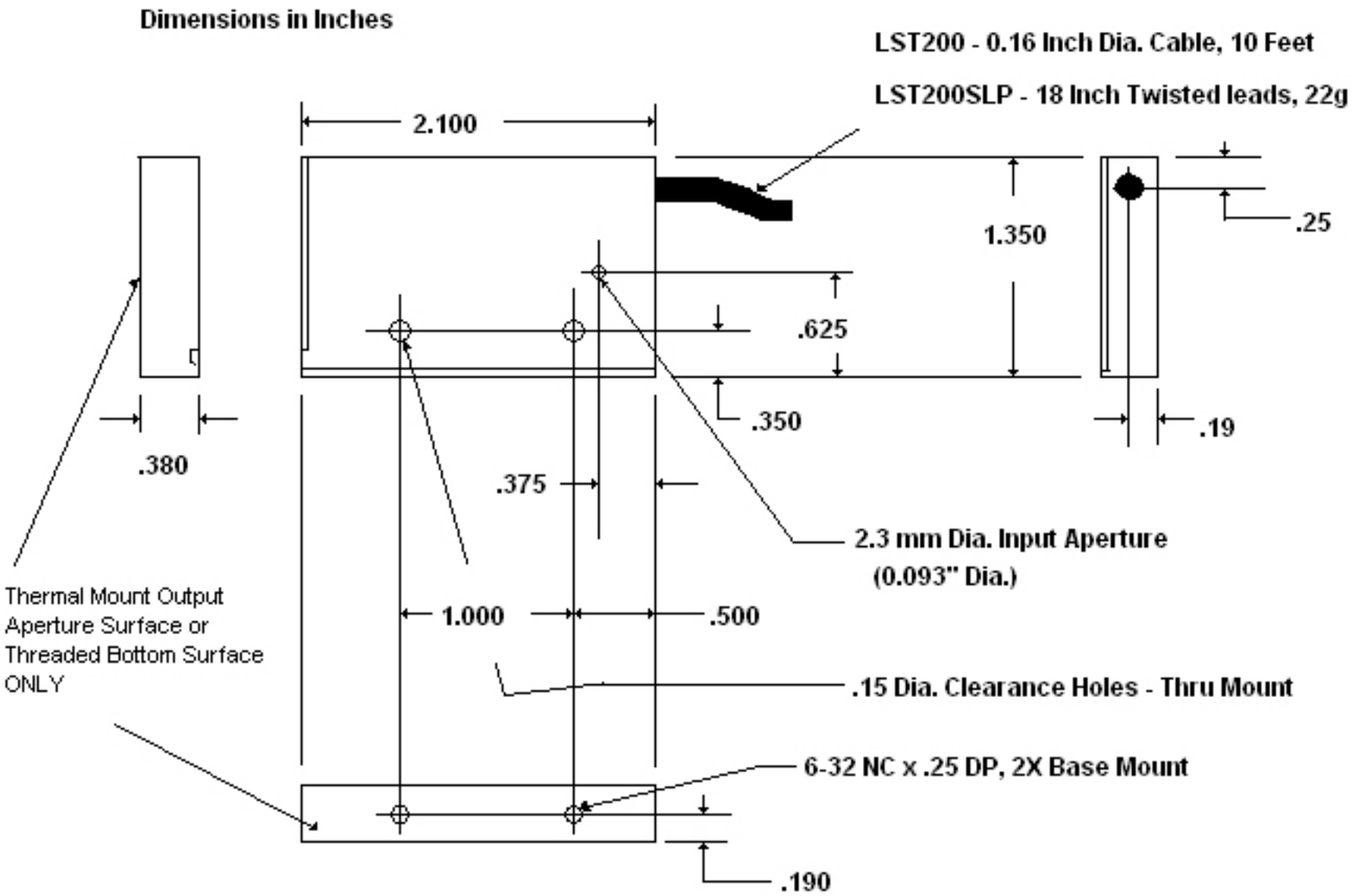
6-1-05